Approved For Release 2004/01/20 : CIA-RDP83M00171R001100070001-8

Motivated by a desire to achieve protection from the elements, the long-standing Soviet practice has been to provide garage-like shelters for the tanks, armored personnel carriers, and support vehicles organic to its combat formations wherever and whenever it is convenient to do so. At present, in the judgment of the DIA experts who monitor such matters, Warsaw Pact cantonments already contain sufficient numbers of such structures to house all of the Soviet and Eastern Europe armored combatants, and a significant proportion of the trucks and other support vehicles, now in residence at those facilities. At any given time, eighty percent or more of the armored combat vehicles would be expected to be inactive and under-roof, while the remaining one-fifth was engaged in routine training exercises.

The sheltering available to Warsaw Pact frontal aviation forces is more extensive still. Since 1968, the Soviets have constructed enough blast resistant "hangerettes" to accommodate ninety percent of the NATO-oriented tactical fighters bombers on a one-for-one basis. Since many of these structures are capable of accepting several fighter-bomber sized aircraft, practical sheltering capacity holds some slack which could be used to accommodate wartime reinforcements. Similar arrangements do not, however, exist for transport aircraft, or for the bombers and reconnaissance types assigned to long-range aviation forces, none of which ordinarily reside in covered structures.

Although emplaced for different purposes, both the environmental shelters housing the major equipage of the land forces and the bomb shelters protecting the tactical combat aircraft serve very effectively

DIA review(s) completed.

Approved For Release 2004/01/20 : CIA-RDP83M00171R001100070001-8

25X1

Approved For Release 2004/01/20 : CIA-RDP83M00171R001100070001-8

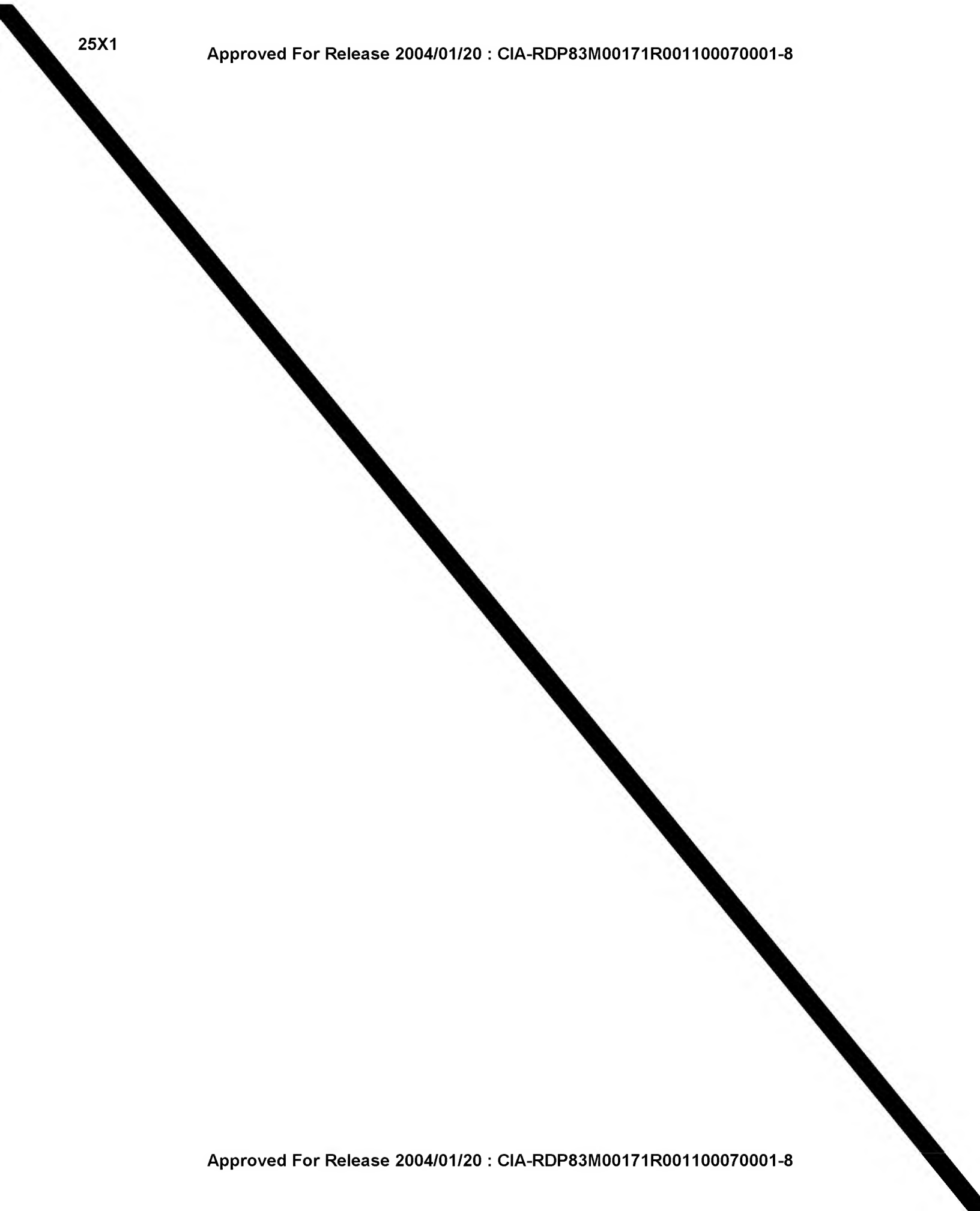

Approved For Release 2004/01/20 : CIA-RDP83M00171R001100070001-8

Approved For Release 2004/01/20 : CIA-RDP83M00171R001100070001-8

TAC AIRCRAFT	ft		ft²	
MIG 21	24 x 52	=	1500	
MIG 23	47 x 55	=	3100	3500
SU 17	46 x 62		3500	

MAC AIRCRAFT			
AN-12	125 x 110	=	16,500
AN-22	212 x 110	=	48,300

SAC AIRCRAFT			
TU-16	110 x 120	=	15900
TU-95	159 x 155	=	29600

$$\frac{\left[(415)(15.9)+(185)(29600)\right](2/3)}{600} = 13.4$$

SSBN				
Delta II	500 x 36	=	21,600	
Delta I	426 x 35	=	17,900	20,000

attack Subs				
November	376 x 32	=	14,500	15000

TANKS, APCS + TRUCKS (meters)			ft²	
T54/55	9.02 6.45 x 3.27	=	280	
T62	10.1 7.4 x 3.3	=	320	
BMP-1 (Tracked)	6.75 x 3.00	=	260	300
BTR-50 (wheeled)	6.83 x 2.32	=	200	
BTR-60	7.56 x 2.82	=	280	
TRUCKS	7 x 2.5	=	230	250

1,199,940 1.2

11

Approved For Release 2004/01/20 : CIA-RDP83M00171R001100070001-8

Approved For Release 2004/01/20 : CIA-RDP83M00171R001100070001-8

USSR Mechanized Infantry

288 tanks @ 300 ft²

300 APCs @ 250 ft²

2,500 Trucks, etc. @ 200 ft²

2.12 million ft² @ £7.00 = £14.84

Approved For Release 2004/01/20 : CIA-RDP83M00171R001100070001-8

Approved For Release 2004/01/20 : CIA-RDP83M00171R001100070001-8

[redacted] STA

STAT [redacted] 1740 Ro

[redacted]

STAT [redacted] ore

Braid | 150 / 200

STAT [redacted] [redacted] STA

Rough Estimate

Prefabricated -

- Extreme light weight.
- Minimal ~~[illegible]~~ frames, open on sides
- Corrugated Metal roof
- No internal supports
  - 400 - 500 sq ft.
  - 2000 - 2500 sq ft
- Large Quantities

8-10 }

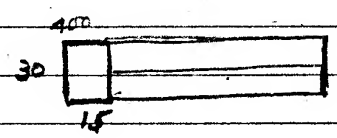

INVENTORY | ALREADY SHELTERED | TO BE SHELTERED

50 x 50 = 2500 ft²

120

[redacted] STA

Approved For Release 2004/01/20 : CIA-RDP83M00171R001100070001-8

Approved For Release 2004/01/20 : CIA-RDP83M00171R001100070001-8

LTRA

Frontal Avail

~~PVO + Transport~~

FRONTAL AVIATION

DBP-B

SECRET

25X

Frontal

SAF - Germany	680	94% of F/A
SAF - Poland	280	94%
Czech	80	51%
Hungary	200	100%
	1250 x2	

Size B - (3) Fishbeds

✓ Leningrad	3100	93%
✓ Baltic	200	83%
✓ Bellorus	160	55%
✓ Carpathian	240	78%
✓ Odessa	230	100%
✓ Trans Caucasus	240	92%
Moscow	20	15%
✓ Kiev	10	25%
X Turk?	40	38%
X Central	210	82%
X Trans Baikal	360	73% -182%
X Far East	380	90%

[redacted]

Bulgaria	190
Czech	310
E Germany	130
Hungary	
Poland	170
Rumania	

Total 2940 — incl PVO.

Motivated by 1967 Arab Israeli War

Approved For Release 2004/01/20 : CIA-RDP83M00171R001100070001-8

Approved For Release 2004/01/20 : CIA-RDP83M00171R001100070001-8

NIE 1114 II
NO

WP NIE

228 ground forces ammunition depots in C. Europe & USSR west of the Urals.

Tank Army 1300 medium tanks.

25X

VEHICLES

TANKS
APCs
TRUCKS

NUMBER | % SHELTERED

Eastern Europe, USSR W of Urals

AIRCRAFT

TACTICAL
AIRLIFT
[illegible]

LRA - reveted = No evidence of extensive concealment goals.

SUBMARINES

SSBNS
ATTACK.

25X

call for AOB.

Ground Forces:

90 % protective shelter tanks + APCs in forward areas.

Most in forward areas are already sheltered

X1

all Soviet aircraft are protective sheltered - air facilities branch (% sheltered)

25X

Approved For Release 2004/01/20 : CIA-RDP83M00171R001100070001-8

by 1985

① $P(D_A) = 0.9$

② $P(X|D_A) = 0.2$

③ $P(D_E) = 0.9$

④ $P(X|D_A \cap D_B) = 0.8$

⑤ $P(X|D_A' \cap D_B') 0.6$

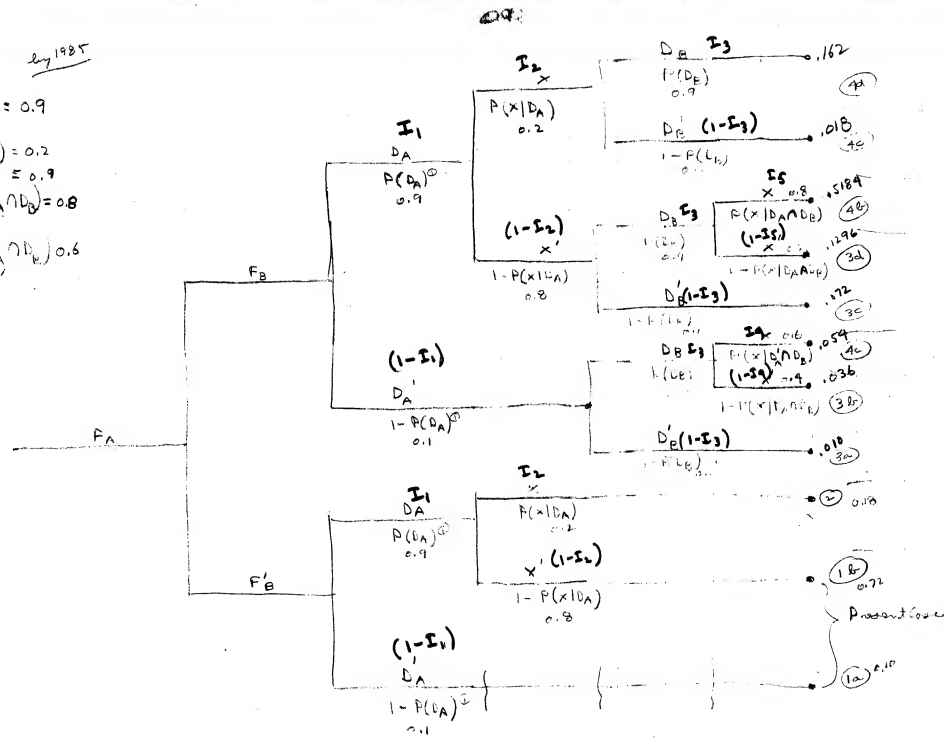

	U.S. Benefits	Δ U.S. Costs	Expected Payoff
	$(1-k_3)(k_1) + (1-k_4)(k_2-k_1)$ (0.27)	B	
	" (0.27)	B	
	" (0.27)	B	
	k_2 (0.7)	B	
	k_2 (0.7)	B	
	$(1-k_3)(k_1) + (1-k_4)(k_2-k_1)$	B	
	k_2 (0.7)	B	
	k_2 (0.7)	B	
	$C_A + \Delta C_{AB}$	B	
	$(1-d_N)C_A$ 0.25	–	0.025
	$(1-k_3)(k_1)$		
	C_A (0.5)	– .455	0.360
	k_1		
			0.05

⑥ k_1 : How well can A satisfy the I&W mission? (values of 0 to 1) 0.5

⑦ k_2 : How well would I&W mission be satisfied if B were added to existing A capability? (0 to 1) 0.7

$(k_2 - k_1)$: Marginal contribution of B 0.2

⑧ k_3 : How much would USSR countermeasures degrade present satisfaction? (0 to 1) 0.5

⑨ k_4 : How much would USSR countermeasures degrade contribution of system B? (0 to 1) (0.9)

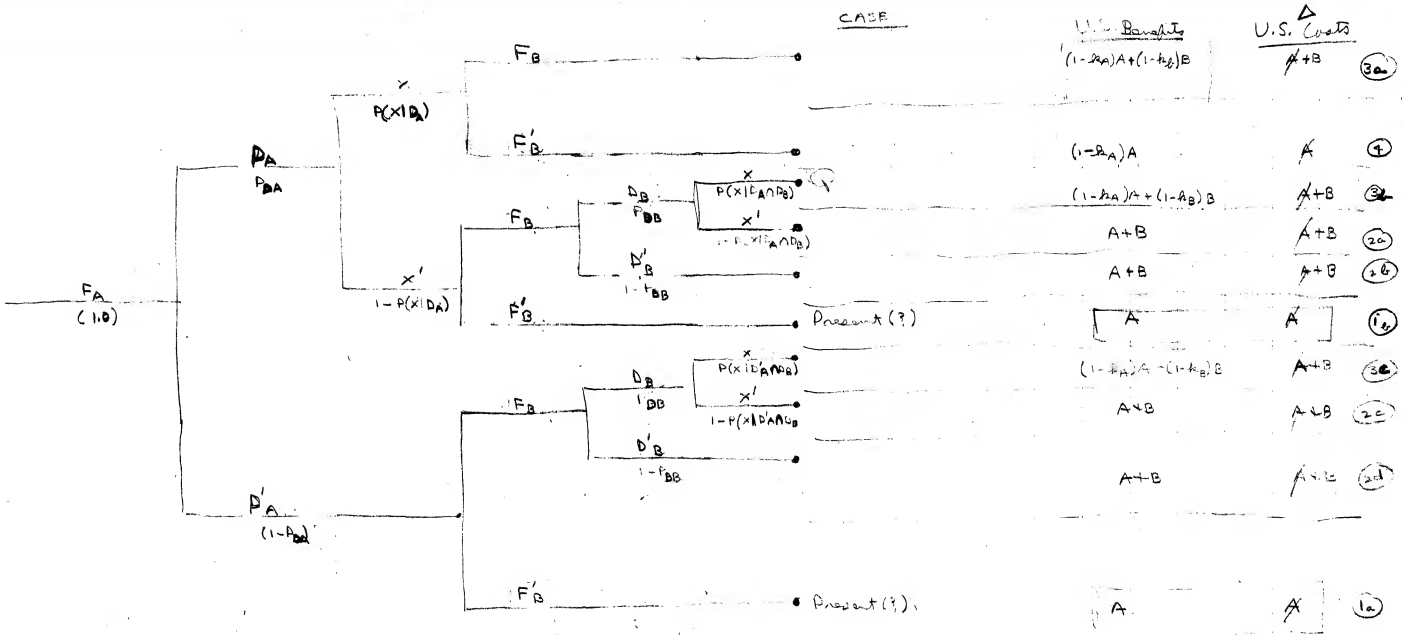
CASE
U.S. Benefits
U.S. Costs
F_A
(1.0)
D_A
P_{DA}
P'_A
$(1-P_{DA})$
x
$P(x|D_A)$
x'
$1-P(x|D_A)$
F_B
F'_B
D_B
P_{DB}
D'_B
$1-P_{DB}$
$P(x|D_A \cap D_B)$
$1-P(x|D_A \cap D_B)$
$P(x|D'_A \cap D_B)$
$1-P(x|D'_A \cap D_B)$
Present (?)
$(1-k_A)A+(1-k_B)B$
$(1-k_A)A$
$A+B$
A
$\cancel{A}+B$
$\cancel{A}$
3a
4
3b
2a
2b
1b
3c
2c
2d
1a

Approved For Release 2004/01/20 : CIA-RDP83M00171R001100070001-8

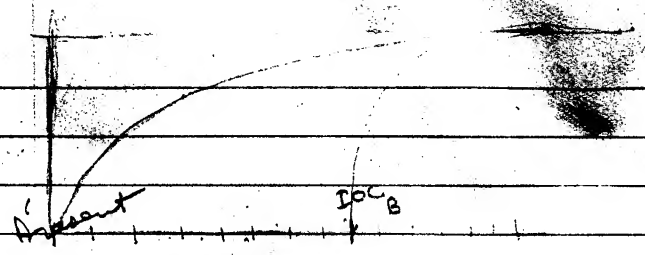

$P(D_A) = (1 - p_{DA})^n$

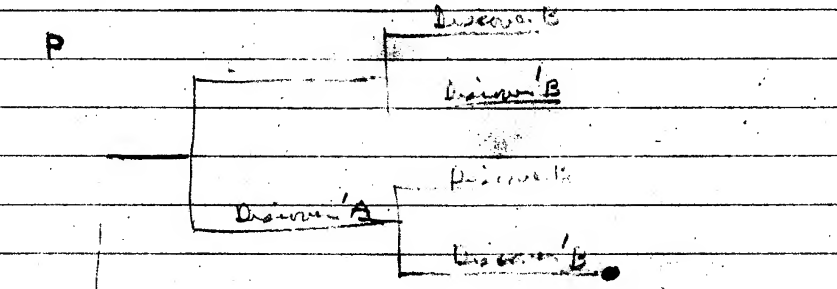

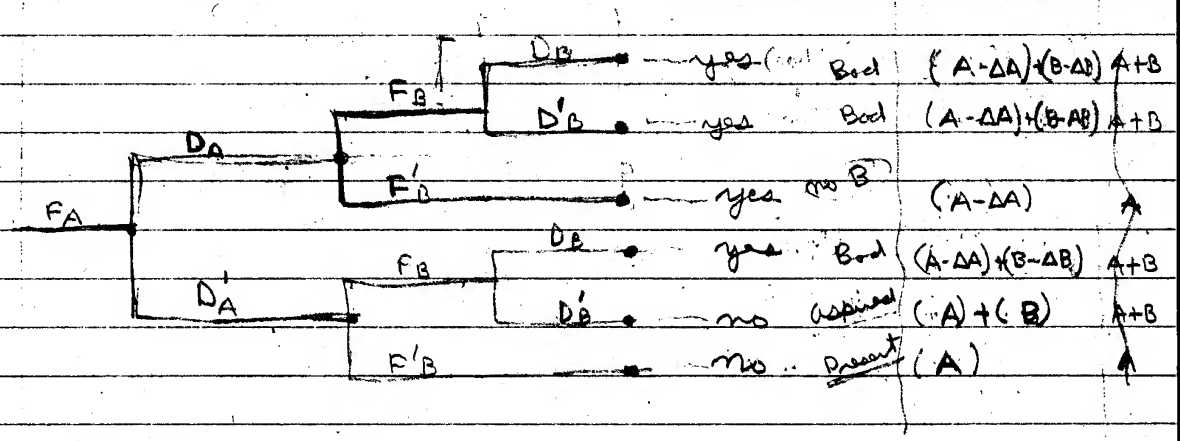

$P(D_A) = f(t) = (1 - p_{DA})^n$

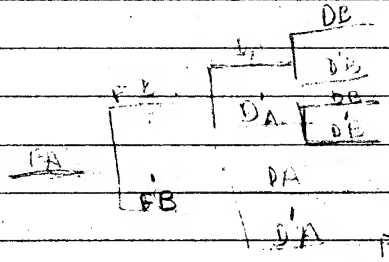

Approved For Release 2004/01/20 : CIA-RDP83M00171R001100070001-8

Approved For Release 2004/01/20 : CIA-RDP83M00171R001100070001-8

$P(D_A)$ = Probability USSR has acquired appreciation of missions and capabilities of System A.

$$\therefore P(D_A) = f(t) = p_{R\&D} + (1 - p_{R\&D})\left[1 - (1 - p_{Ai})^{t=m}\right]$$

where: m = number of months in period being considered (input)

p_{Ai} = probability D_A occurs in any given month of System A operations (input).

$P(D_B)$ = Probability USSR has acquired appreciation of missions and capabilities of system B

$$P(D_B) = f(t) = 1 - (1 - p_B)^{t=m \text{ or } t_B}$$

where: t_B = time (months in future) that System B becomes operational

$P(X \mid D_A)$ = Probability that USSR implements countermeasures upon discovering System A

$P(X \mid D_B)$ = Probability that USSR implements countermeasures upon discovering System B

A = Contribution of System A to I+W mission (in absence of USSR countermeasures)

B = contribution of System B to I + W mission

p_a = Degradation of system A contribution resulting from countermeasures

p_b = Degradation of System B contribution resulting from countermeasures

Approved For Release 2004/01/20 : CIA-RDP83M00171R001100070001-8

25X1

Approved For Release 2004/01/20 : CIA-RDP83M00171R001100070001-8

52

$75 +150 65
$125

$A - \Delta A + B - \Delta B = C_A + C_B$

$A = C_A$

$A - \Delta A + B - \Delta B - C_A - C_B = A - C_A$

$(B - \Delta B) - \Delta A = C_B$

$\beta_A B + (1 - \beta_A) B = C_B$

Is contribution of B post-sheltering less loss of contribution of A as a result of sheltering greater than cost of introducing B?

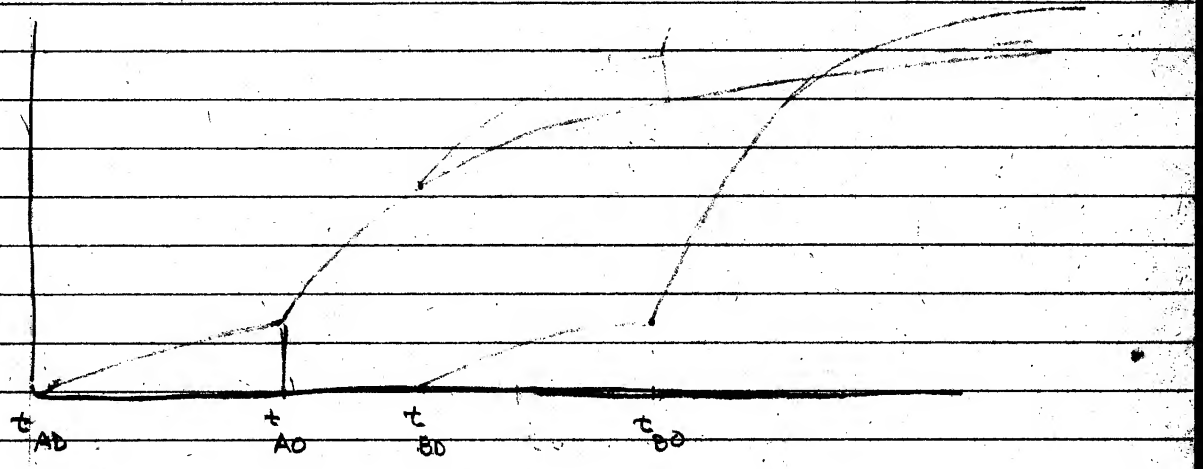

Approved For Release 2004/01/20 : CIA-RDP83M00171R001100070001-8

Approved For Release 2004/01/20 : CIA-RDP83M00171R001100070001-8

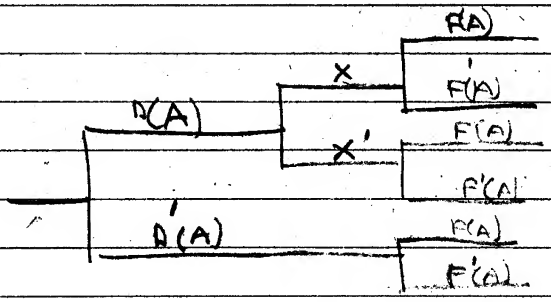

Approved For Release 2004/01/20 : CIA-RDP83M00171R001100070001-8